CONTENTS

1. Exploded Views and Parts Lists 1-2

1-1. Main Assembly
1-2. OPE Unit Assembly
1-3. Handset Unit Assembly
1-4. Engine Unit Assembly
1-5. Base Unit Assembly

2. ELECTRICAL PARTS 2-1

3. CIRCUIT DIAGRAM 3-1

1. Exploded Views and Parts Lists

1-1. Main Assembly

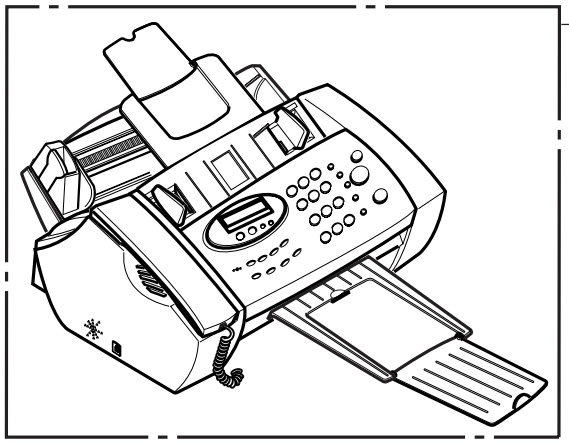

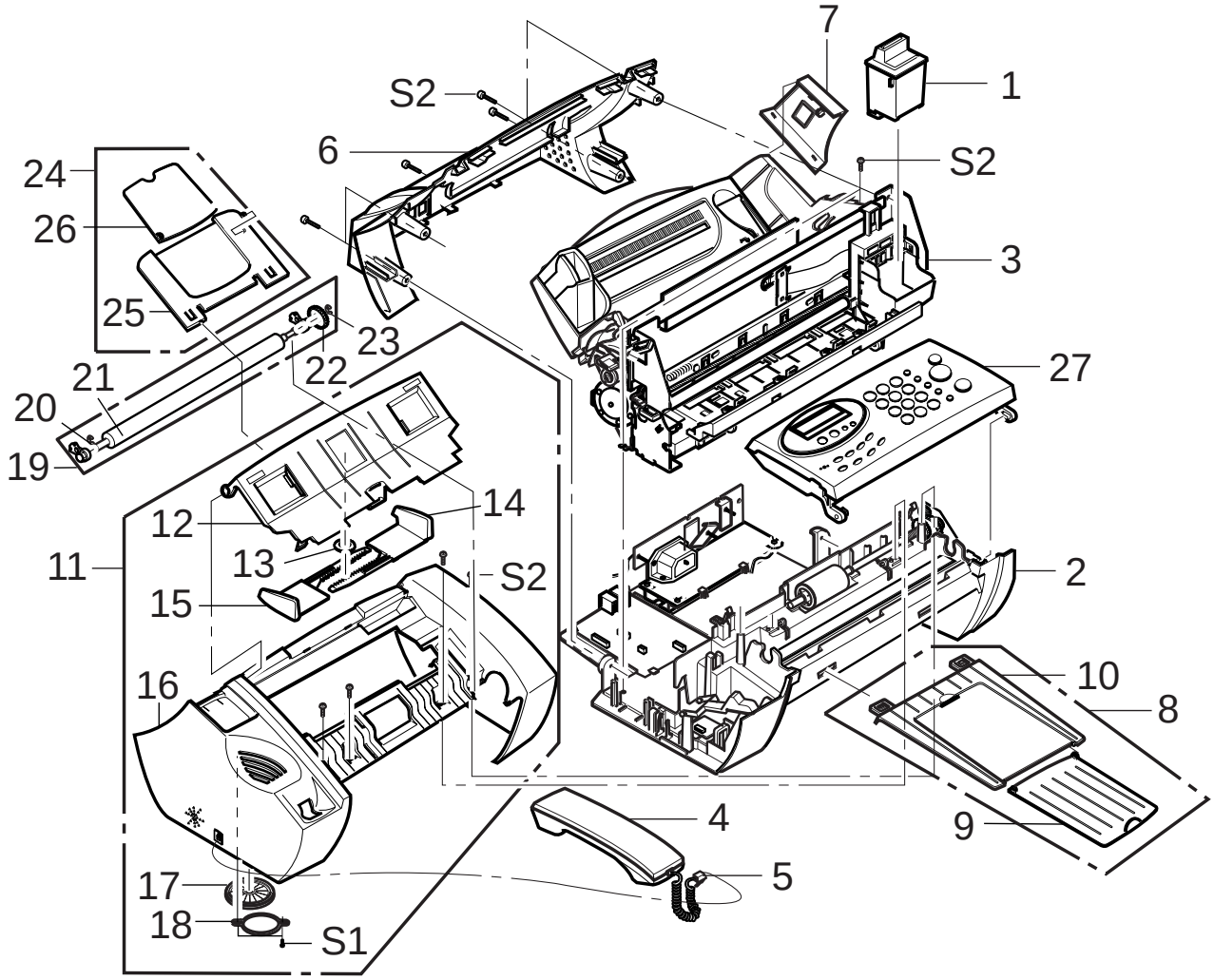

Main Assembly Parts Lists

Location No.	Description	SEC. Code	Q'ty	Remark
0		SF-3000I/XFA		SF3000
		SF-3000TI/XFA		SF3000T
1	PRINT HEAD INK-MONO	JB47-30506A	1	
2	ELA UNIT-BASE	*	1	
3	ELA UNIT-ENGINE	*	1	
4	ELA HOU-HANDSET	JB96-00946A	1	
5	CBF CURL CORD	JF39-60001A	1	
6	PMO-COVER REAR	JB72-41240A	1	
7	PMO-DUMMY ASF	JB72-41267A	1	
8	MEC-STACKER TX	JG75-10009A	1	
9	PMO-STACKER TX(1)	*	1	
10	PMO-STACKER TX(2)	*	1	
11	ELA UNIT-COVER TOP	JB96-00948A	1	SF3000
		JB96-00956A	1	SF3000T
12	PMO-COVER DOC	*	1	
13	GEAR-PINION	*	1	
14	PMO-GUIDE DOC R	*	1	
15	PMO-GUIDE DOC L	*	1	
16	PMO-COVER TOP	*	1	
17	SPEAKER	3001-001044	1	
18	IPR-UNIT FIXING BRAC	*	1	
19	MEA ETC-ROLLER WHITE	JB97-01096A	1	
20	PMO-BUSHING WHITE	*	2	
21	MEC-ROLLER WHITE	*	1	
22	PMO-GEAR DRIVE(B4)	*	1	
23	RING-C	*	2	
24	MEC-CHUTE	JB75-11087A	1	
25	PMO-CHUTE(1)	*	1	
26	PMO-CHUTE(2)	*	1	
27	ELA UNIT-OPE	JB96-00971B	1	SF3000
		JB97-00954F	1	SF3000T
S1	SCREW-TAPTITE, PWH, +, M2.5, L6	6003-000193	2	
S2	SCREW-TAPTITE, BH, +, M3, L8	6003-000259	12	

*: service not Available

1-2. OPE Unit Assembly

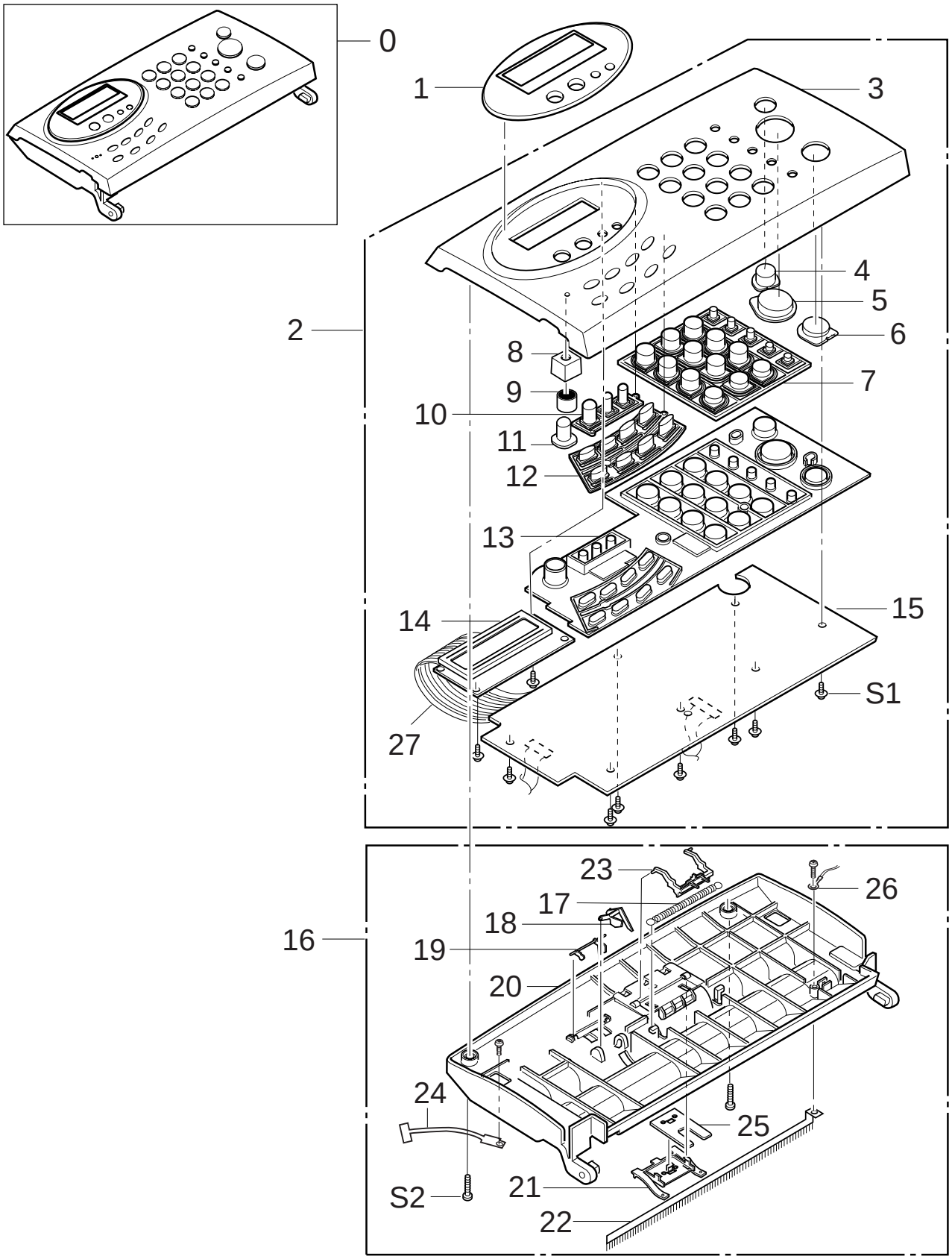

OPE Unit Assembly Parts Lists

Location No.	Description	SEC. Code	Q'ty	Remark
0	ELA UNIT-OPE	JB96-00971B	1	SF3000
		JB96-00954F	1	SF3000T
1	MEA LCD WINDOW	JB75-11090A	1	SF3000
		JB75-11096A	1	SF3000T
2	ELA HOU-COVER OPE	JB96-00945E	1	SF3000
		JB96-00955F	1	SF3000T
3	PMO-COVER OPE	JB72-41261E	1	SF3000
		JB72-41354F	1	SF3000T
4	PMO-KEY STOP	JB72-41253A	1	
5	PMO-KEY START	JB72-41252A	1	
6	PMO-KEY OHD	JB72-41251A	1	
7	PMO-KEY TEL	JB72-41249A	1	
8	PMO-MIC ADAPTER	GB72-40770A	1	ONLY SF3000T
9	MIC-CONDENSOR	3003-000120	1	ONLY SF3000T
10	PMO-KEY TAD	JB72-41276A	1	ONLY SF3000T
11	PMO-KEY ANSWER	JB72-41275A	1	ONLY SF3000T
12	PMO-KEY FUNCTION	JB72-41250A	1	
13	RMO-CONTACT RUBBER	JB73-40906A	1	
14	DISPLAY LCD	JF07-20061A	1	
15	PBA SUB I/F-OPE	JG92-01036A	1	SF3000
		JG92-01036B	1	SF3000T
16	MEA UNIT-SCAN UPPER	JB97-01094A	1	
17	ICT-SPRING COIL	JG70-40514A	1	
18	PMO-LEVER SENSOR SCN	JB72-41257A	1	
19	PMO-LEVER SENSOR DOC	JB72-41247A	1	
20	PMO-FRAME SCAN UPPER	JB72-41248A	1	
21	PMO-HOLDER RUBBER	JG72-40044A	1	
22	MEC-ANTISTATIC BRUSH	JB75-11098A	1	
23	PMO-SUPPORT ADF	JG72-40043A	1	
24	PMO-TIE STOPPER	JG72-40717A	1	
25	RPR-RUBBER ADF	JG73-10003A	1	
26	CBF HARNESS-OPE(OPE-FRAME)	JB39-40532A	1	
27	CBF HARNESS(LCD FLAT CABLE)	JG39-41019A	1	
S1	SCREW-TAPTITE, PWH, +, B, M2.5, L6	6003-000193	9	
S2	SCREW-TAPTITE, BH, +, B, M3, L8	6003-000259	4	

1-3. Handset Unit Assembly

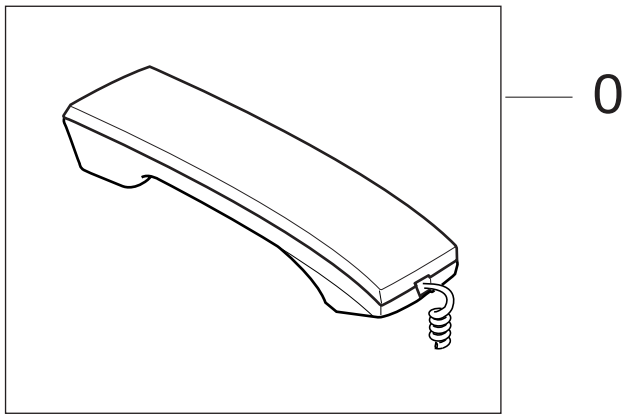

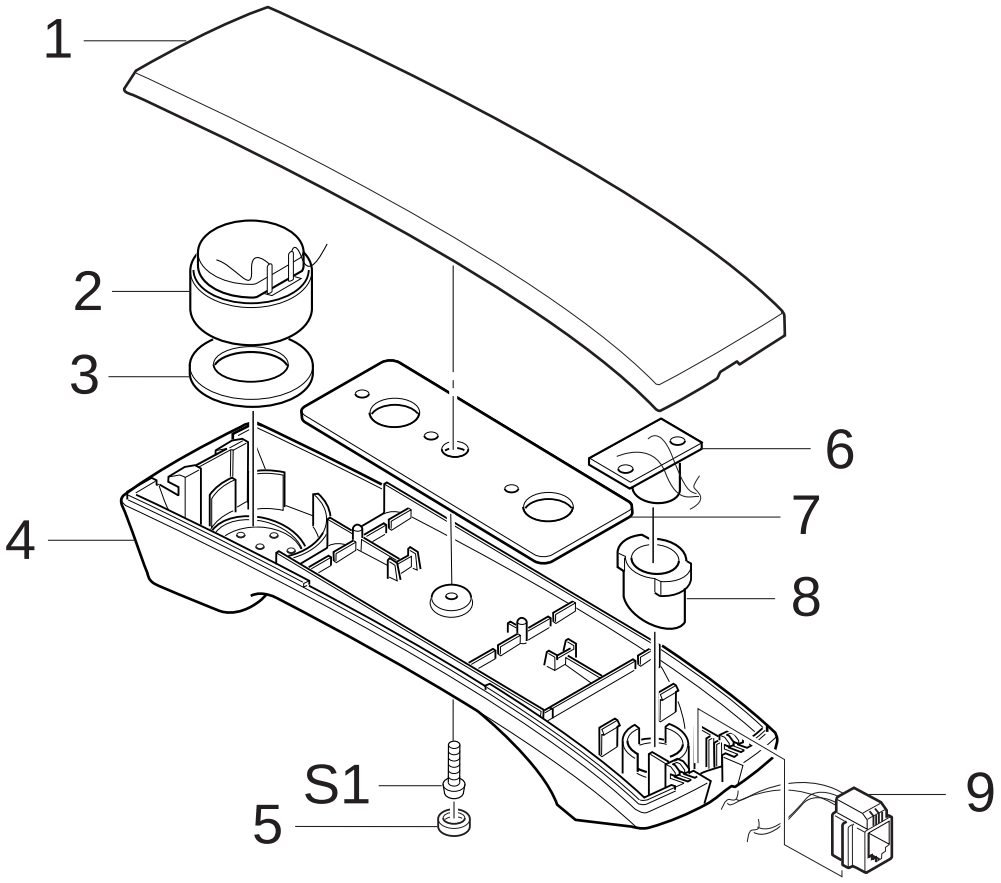

Handset Unit Assembly Parts Lists

Location No.	Description	SEC. Code	Q'ty	Remark
0	ELA HOU-HANDSET	JB96-00946A	1	
1	PMO-HANDSET UPPER	*	1	
2	AUDIO-RECEIVER	*	1	
3	RING-OP, ID17, OD35, T2	*	1	
4	PMO-HANDSET LOWER	*	1	
5	RMO-HOLE DUMMY	*	1	
6	PBA SUB ETC-MIC	*	1	
7	IPR-WEIGHT BALANCE	*	1	
8	RMO-RUBBER MIC	*	1	
9	CBF HARNESS-JACK	*	1	
S1	SCREW-TAPTITE, PH, +, B, M3, L8	*	1	

*: service not Available

1-4. Engine Unit Assembly

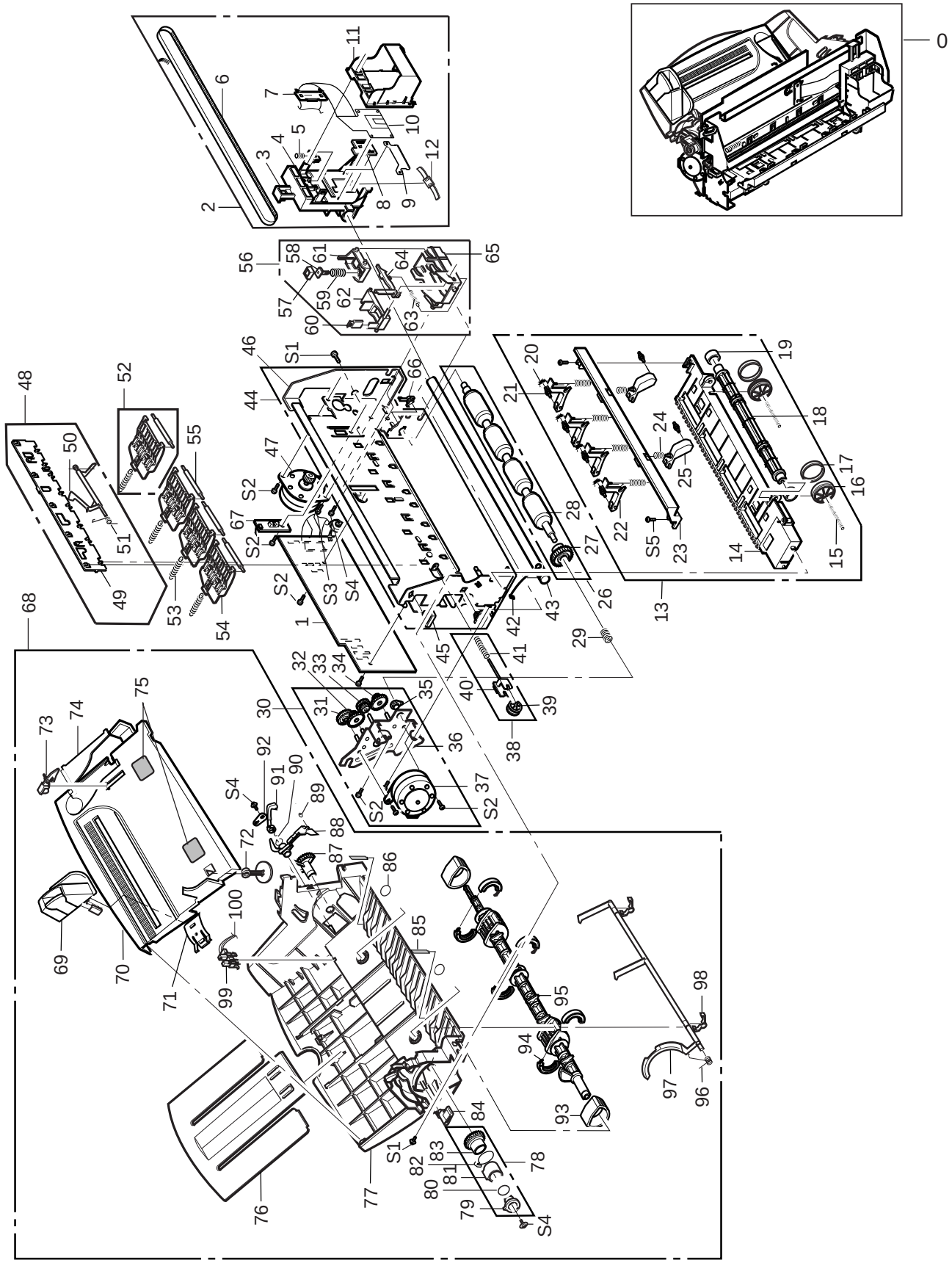

Engine Unit Assembly Parts Lists

Location No.	Description	SEC. Code	Q'ty	Remark
0	ELA UNIT-ENGIN(AT)	*	1	
1	PBA MAIN-MAIN	JG92-01035A	1	SF3000
		JG92-01035B	1	SF3000T
2	ELA HOU-CR	JB96-00943A	1	
3	PMO-FRAME CR	*	1	
4	PMO-LATCH HEAD	*	1	
5	SPRING-CS	*	1	
6	BELT-TIMING	JB66-20901A	1	
7	PMO-HOLDER FPC	*	1	
8	RMO-CONTACT	*	1	
9	IPR-DEFLECTOR GUIDE	*	1	
10	PCB-FPC CABLE	JB41-10100B	1	
11	PMO-CRADDLE HEAD B	JB72-40243A	1	
12	PMO-DAMPER CR	*	1	
13	MEC-FRAME BASE	JB97-01092A	1	
14	PMO-FRAME BASE	*	1	
15	SPRING-RING	*	2	
16	PMO-PULLEY EXIT	*	2	
17	RMO-RUBBER PULLEY	*	2	
18	PMO-ROLLER EXIT	*	1	
19	REX-FEED EXIT	JB73-20901A	2	
20	IPR-WHEEL STAR(T)	*	6	
21	PMO-HOLDER WHEEL	*	6	
22	PMO-LEVER EXIT	*	4	
23	PMO-HOLDER EXIT	*	1	
24	SPRING-CS(EXIT)	*	6	
25	PMO-LEVER EXIT(2)	*	2	
26	MEA-ROLLER FEED	JB97-00939A	1	
27	GEAR-FEED	*	1	
28	MEC-ROLLER FEED	*	1	
29	SPRING-ES	6107-000003	1	
30	MEA UNIT-BRKT LF	JB97-01091A	1	
31	GEAR-LF IDLE4	*	1	
32	GEAR-LF IDLE3	*	1	
33	GEAR-LF IDLE2	*	1	
34	GEAR-LF IDLE1	*	1	
35	BEARING-FEED L,	*	1	
36	IPR-BRACKET LF MOTOR	*	1	

Location No.	Description	SEC. Code	Q'ty	Remark
37	MOTOR-STEP, DC24V,LF MOTOR	JB31-10102F	1	
38	MEA UNIT-PULLEY IDLE	JB97-01089A	1	
39	PMO-PULLEY IDLE	*	1	
40	PMO-HOLDER PULLEY	*	1	
41	SPRING-CS	*	1	
42	SPRING-CR SHAFT	JB61-70007A	1	
43	ICT-SHAFT CR	JB70-40901A	1	
44	MEC-FRAME MAIN	JB75-11097A	1	
45	CABLE CLAMP	*	2	
46	IPR-FRAME MAIN	*	1	
47	MOTOR-STEP,CR MOTOR	JB31-10102C	1	CR MOTOR
48	MEA ETC-ROLLER, SUB	JB97-00240A	1	
49	PMO-HOLDER ROLLER	*	1	
50	PMO-ACTUATOR FEED	*	1	
51	SPRING-ACTUATOR	*	1	
52	MEA-FRICTION ROLLER	JB97-00938A	1	
53	SPRING-FRICTION	*	1	
54	PMO-HOLDER FRICTION	*	1	
55	ICT-ROLLER FRICTION	*	1	
56	MEA UNIT-FRAME HOME	JB97-01090A	1	
57	RMO-CAP, HEAD	*	1	
58	PMO-HOLDER CAP	*	1	
59	SPRING-CS	*	1	
60	RMO-WIPER, HEAD	*	1	
61	PMO-GUIDE CAP	*	1	
62	PMO-GUIDE WIPPER	*	1	
63	SPRING-LEVER	*	1	
64	PMO-LEVER WIPER	*	1	
65	PMO-FRAME HOME	*	1	
66	BEARING GEED(R)	JB66-10002A	1	
67	ELA HOU-HOME	JB96-00930A	1	
68	MEA-ASF ASSY	JB97-01093A	1	
69	PMO-GUIDE PAPER SIDE	JB72-40918A	1	
70	PMO-PLATE KNOCK UP	*	1	
71	IPR-GUIDE LATCH	*	1	
72	PMO-LEVER DAMPER	*	1	
73	PMO-ACTUATOR PE	*	1	
74	PMO-GUIDE ENVELOPE	JB72-40951A	1	
75	MMP-PAD	*	2	

Location No.	Description	SEC. Code	Q'ty	Remark
76	PMO-GUIDE EXTENSION	JB72-40218A	1	
77	PMO-FRAME ASF	*	1	
78	MEC-CLUTCH	JB75-10931A	1	
79	PMO-HUB CLUTCH	*	1	
80	SPRING-CLUTCH	*	1	
81	PMO-RATCHET CLUTCH	*	1	
82	SPRING-RATCHET	*	1	
83	GEAR-CLUTCH	*	1	
84	PMO-STOPPER CLUTCH	JB72-40929A	1	
85	PPR-SHEET ASF	*	1	
86	SPRING-ES, PI0.2, D13.3, L13	*	1	
87	PMO-CAM PICK UP	*	1	
88	PMO-FINGER ASF	*	1	
89	SPRING-ES, PI0.2, D3.4, L13	*	1	
90	SPRING-FINGER LEVER	*	1	
91	PMO-LEVER FINGER	*	1	
92	IPR-BRACKET FINGER	*	1	
93	RMO-RUBBER PICK UP	*	2	
94	PMO-ROLLER IDLE	*	6	
95	PMO-SHAFT PICK UP	*	1	
96	SPRING-RETURN LEVER	*	1	
97	PMO-LEVER RETURN	*	1	
98	PMO-BUSHING LEVER	*	2	
99	PHOTO-INTERRUPTER,PAPER EMPTY	*	1	
100	CBF HARNESS-PES	*	1	MAIN-PEMPTY
S1	SCREW-TAPTITE, BH, +, M3, L5.5	6003-001016	3	
S2	SCREW-TAPTITE, BH, +, S, M3. L5	6003-000126	8	
S3	SCREW-TAPTITE, BH, +, M3, L4	6003-000008	1	
S4	SCREW-TAPPING, WPH, +, 2, M3, L8	6002-000175	3	
S5	SCREW-TAPPING, BH, +, M3, L10	6002-000101	2	

*: service not Available

1-5. Base Unit Assembly

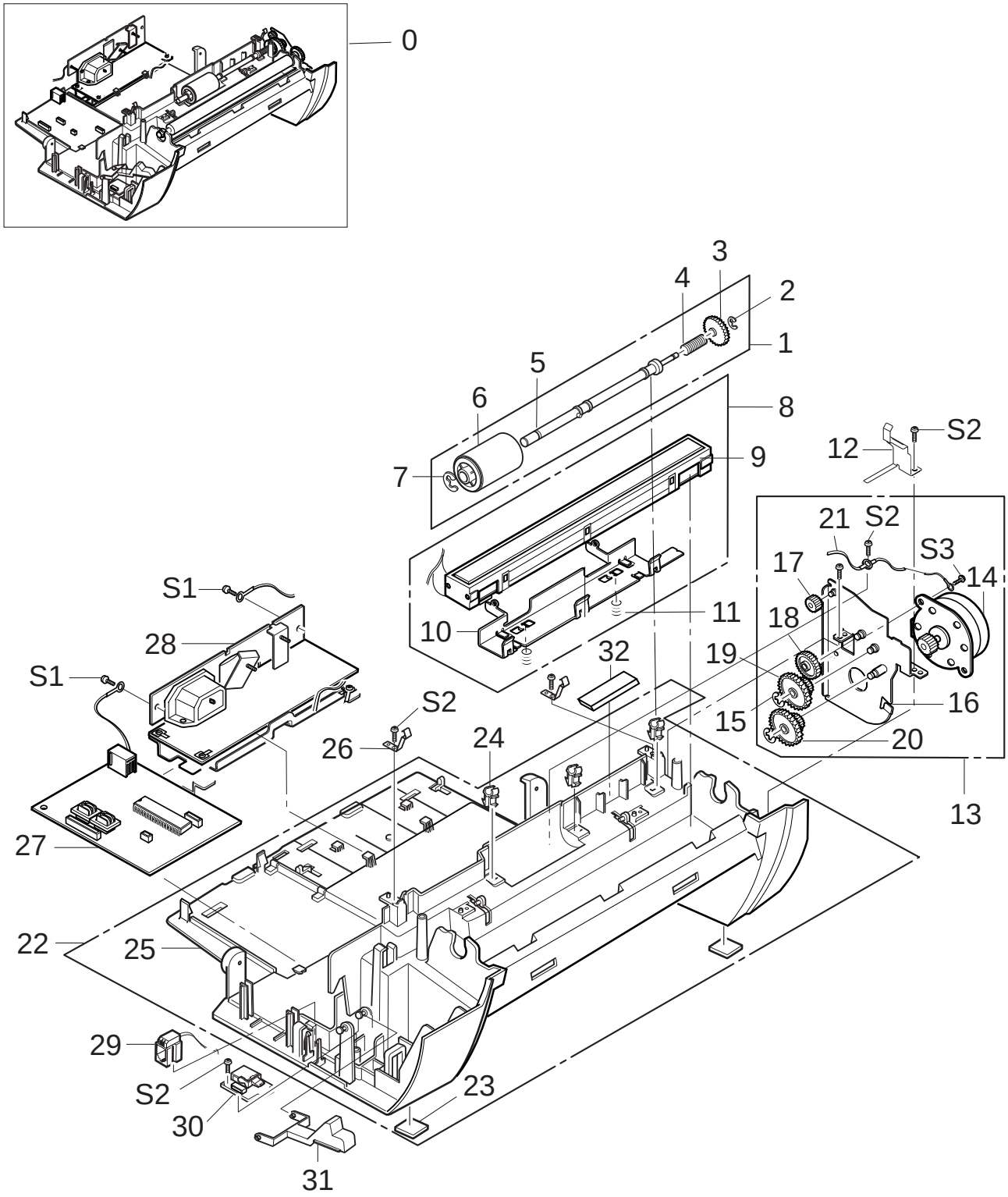

Base Unit Assembly Parts Lists

Location No.	Description	SEC. Code	Q'ty	Remark
0	ELA UNIT-BASE	*	1	
1	MEA ETC-ROLLER ADF	JB97-01088A	1	
2	RING-C, ID3, OD7, T0.6	*	1	
3	GEAR-GEAR ADF(AT)	*	1	
4	ICT-SPRING CLUTCH	*	1	
5	PMO-SHAFT ADF	*	1	
6	MEC-ROLLER ADF	*	1	
7	RING-C, ID5, OD11, T0.6	*	1	
8	ELA UNIT-CIS	JB96-00939A	1	
9	CONTACT IMAGE SENSOR	0609-001066	1	
10	IPR-GUIDE CIS	JB70-10945A	1	
11	SPRING-CIS	JB61-70938A	2	
12	IPR-PLATE GROUND	JB70-10944A	1	
13	ELA UNIT-SCAN MOTOR	JB96-00947A	1	
14	MOTOR-STEP, 7.5 deg, 24 V	3101-001150	1	
15	RING-C, ID2.5, OD6, T0.4	*	2	
16	IPR-BRACKET MOTOR	*	1	
17	PMO-GEAR CLUTCH	*	1	
18	PMO-GEAR IDLE(B)	*	1	
19	PMO-GEAR IDLER	*	1	
20	PMO-GEAR TRANS(B4)	*	1	
21	CBF-HARNESS:EARTH	*	1	
22	MEC-BASE	JB75-11088A	1	
23	FOOT	*	2	
24	PMO-BUSHING	*	1	
25	PMO-BASE	*	1	
26	LOCKER-TX	JG64-30001A	2	
27	PBA SUB I/F-LIU	JB92-00974A	1	SF3000
		JB92-01020A	1	SF3000T
28	SMPS-V2:8F3000,AC/DC	JG44-10057A	1	
29	CBF HARNESS-HANDSET	JB39-40527A	1	
30	PBA ETC-HOOK	JG92-01037A	1	
31	PMO-HOOK	JB72-41241A	1	
32	MPR-FELT INK	JG74-10505A	1	
S1	SCREW-TAPTITE, BH, +, M3, L5	6003-000126	2	
S2	SCREW-TAPTITE, BH, +, M3, L8	6003-000259	5	
S3	SCREW-TAPTITE, BH, +, B, M3, L6	6003-000261	1	

*: service not Available

MEMO